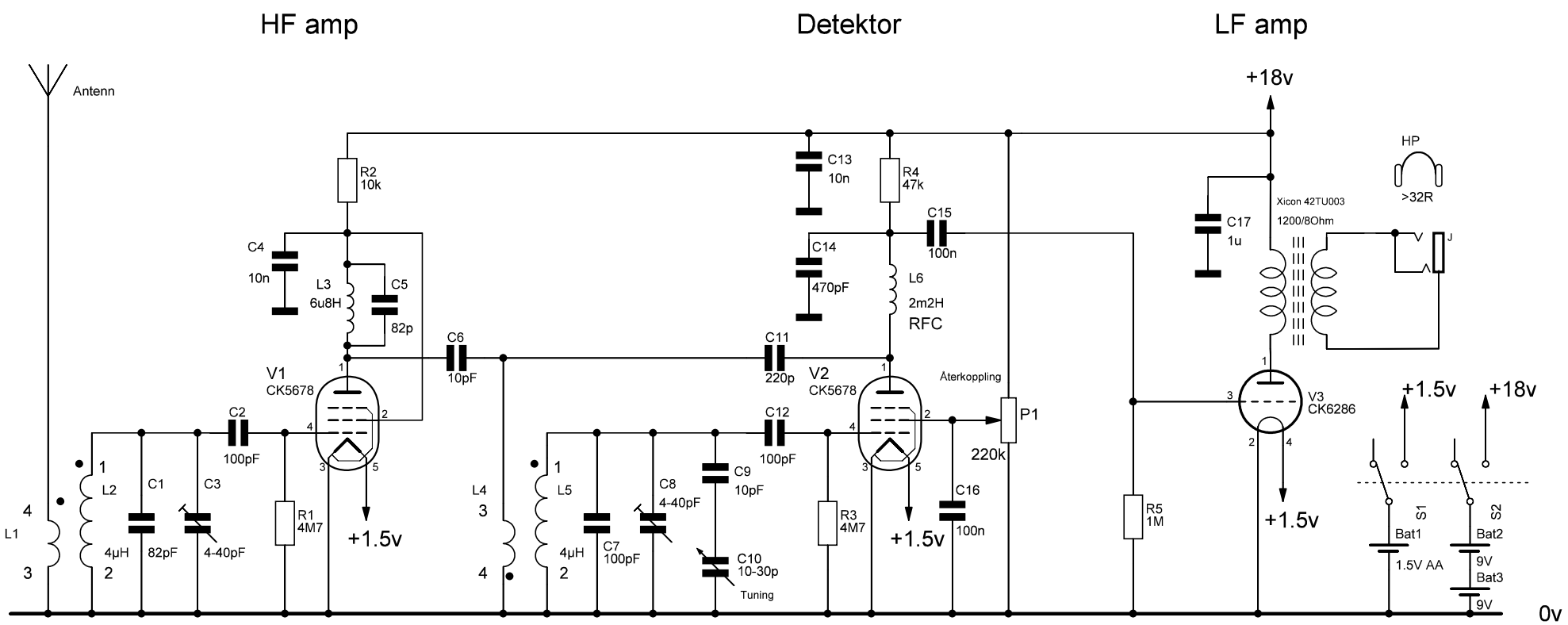

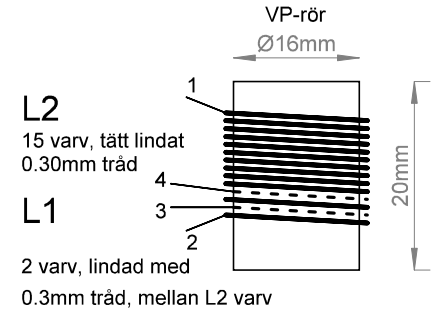

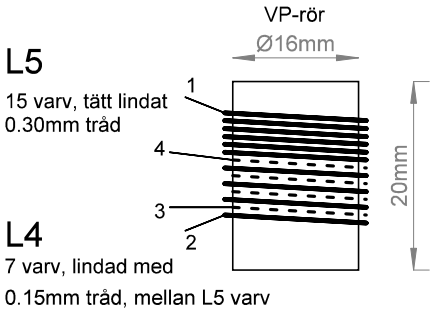

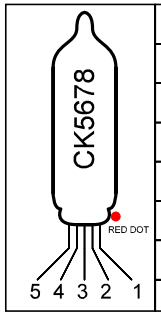

RF-Pentode CK5678	
Terminal connections	
1	Plate
2	Grid #2
3	Fil, neg. shield
4	Grid #1
5	Fil, positive

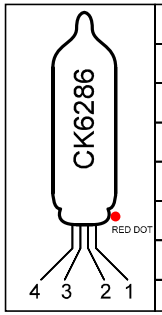

Triode CK6286	
Terminal connections	
1	Plate
2	Fil, negative
3	Grid
4	Fil, positive

Titel:	Detektormottagare 40m med Subminrör
File: Submin-Tube_receiver_01100929_01	
Ritad: SM7ZFB	2010-09-29